CYLINDER ROLLER – according DIN 5402-1

DESIGN: cylindrical- spherical profile (CS)

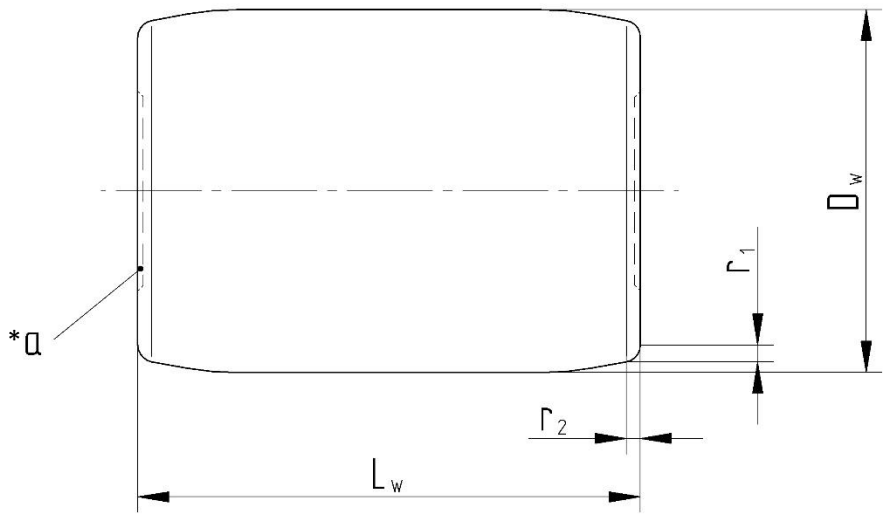

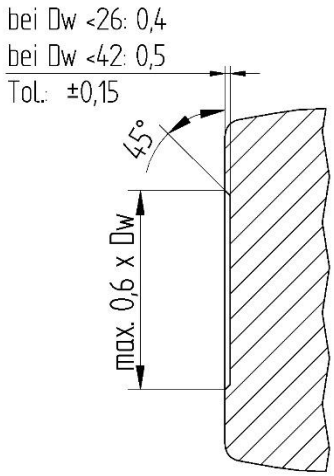

*a Exemption is optional

MATERIAL, HARDNESS:

Bearing steel acc. DIN EN ISO 683-17
Standard material: ≤ D_w 30 mm = 100Cr6 (1.3505)
> D_w 30 mm = 100CrMnSi6-4 (1.3520)

Hardness acc. DIN 5402-1
58 - 65 HRC

DIAMTER, LATERAL SURFACE - DIMENSION ACCURACY, VARIATION, ROUGHNESS:

Diameter D_w [mm]	Upper Tolerance [µm]	Lower Tolerance [µm]	Roundness [µm]	Diameter tolerance of a variation [µm]	Variation range middle tolerance [µm]			Roughness [Ro]
- to 26	+7	-9	0,8	2	+6 to +1	0	-1 to -8	0,1
26 to 40	+7,5	-10,5	1,2	3	+6 to +1,5	0	-1,5 to -9	0,1
40 to 75	+7,5	-10,5	2	3	+6 to +1,5	0	-1,5 to -9	0,16
75 to 120	+12,5	-12,5	2,5	5	+10 to +2,5	0	-2,5 to -10	0,2

LENGTH, FRONT FACE - DIMENSION ACCURACY, VARIATION, ROUGHNESS:

Length L_w [mm]	Upper tolerance [µm]	Lower tolerance [µm]	Roller length tolerance of a variation [µm]	Length tolerance a variation [µm]	Variation range middle tolerance [µm]	Roughness [Ro]
- to 48	+3	-15	8	6	0 -6 -12	0,25
48 to 120	+5	-35	10	10	0 -10 -20 -30	0,4

CYLINDER ROLLER – according DIN 5402-1

DESIGN: cylindrical- spherical profile (CS)

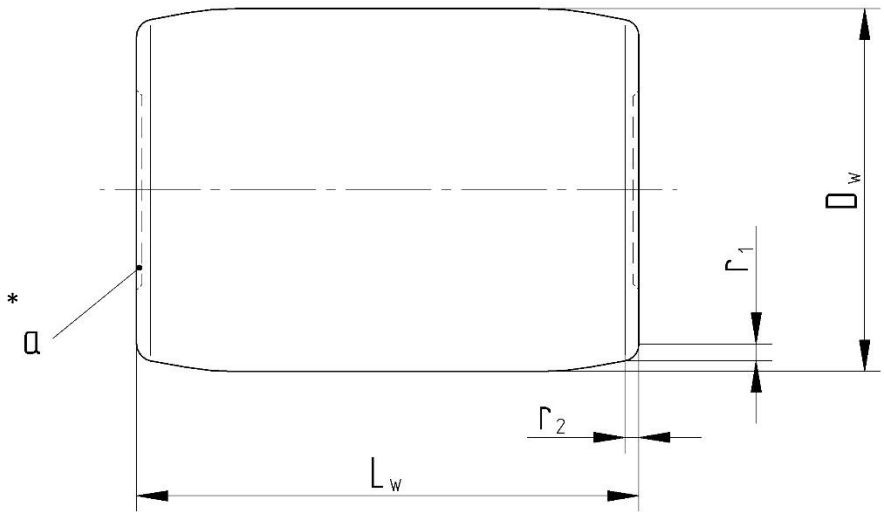

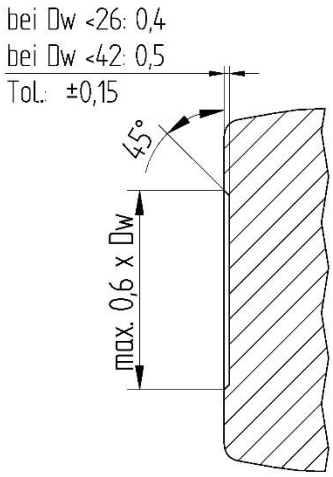

*a Exemption is optional

MARKING EXAMPLE: **ZRO 12x18 ZB +3/-12**

Marking of a cylinder roller with D_w = 12 mm roller diameter, L_w = 18 mm roller length, cylindrical- spherical profile, diameter variation +3 µm (+4 µm bis +2 µm), length variation -12 µm (-9 µm to -15 µm)

BEARING CORNER RADIUS LIMIT SIZES:

Diameter D_w [mm]	r1 min [mm]	r1 max [mm]	r2 min [mm]	r2 max [mm]
- to 4	0,2	0,4	0,2	0,7
4 to 8	0,2	0,6	0,2	0,7
8 to 12	0,3	0,7	0,3	1,0
12 to 16	0,4	0,8	0,4	1,2
16 to 20	0,4	1,0	0,4	1,2
20 to 26	0,5	1,1	0,5	1,3
26 to 34	0,6	1,4	0,6	1,4
34 to 42	0,7	1,7	0,7	1,7
42 to 56	0,9	2,1	0,9	2,1
56 to 64	1,2	2,4	1,2	2,4
64 to 75	1,4	2,6	1,4	2,6
75 to 95	1,8	3,2	1,8	3,2
95 to 115	2,2	3,8	2,2	3,8
115 to 120	2,7	4,3	2,7	4,3

Every specification has been edited
and verified carefully. STI Bearings GmbH
assumes no liability for potential errors
or incompleteness. Technical
modifications are subject of changes.

© 2020 by STI Bearings GmbH

Reproduction, even excerpts, only
with our approval.